Automatic Day/Night Interior Mirror

⇒ with out Automatic headlights assistent
⇒ with out Coming-/leavinghome function
From 2003 m. y.

Main fuse

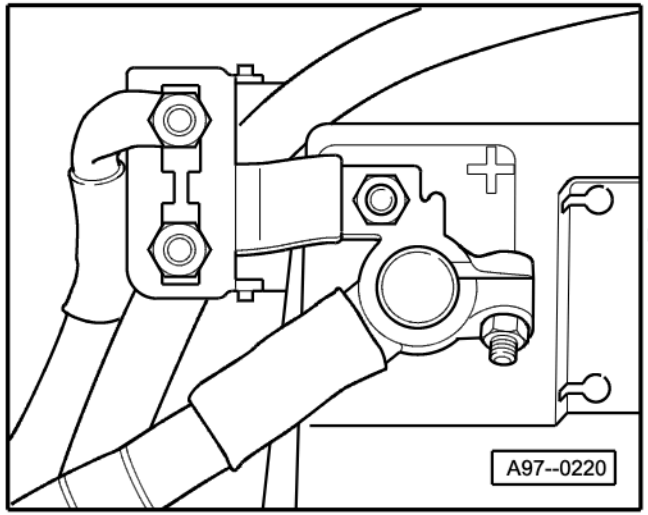

Protected by copyright. Copying for private or commercial purposes, in part or in whole, is not permitted unless authorised by AUDI AG. AUDI AG does not guarantee or accept any liability with respect to the correctness of information in this document. Copyright by AUDI AG.

♦ on the Battery

Fuse holder

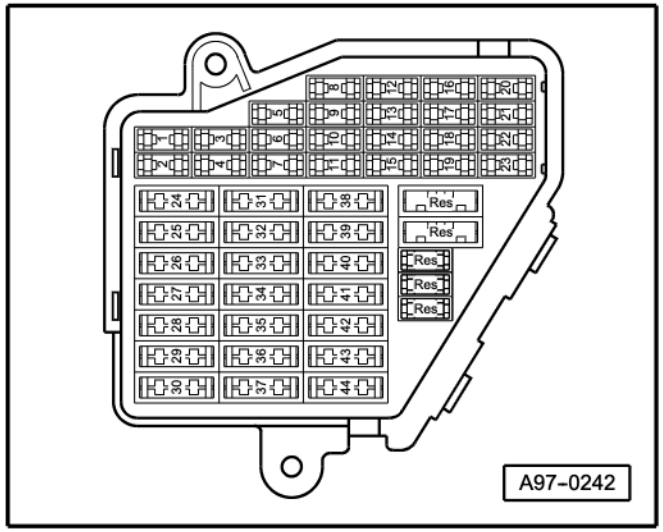

- Instrument panel driver side

Fuse Colors
30 A - Green
25 A - Withe
20 A - Yellow
15 A - Blue
10 A - Red
7,5 A - Brown
5 A - Beige

Note:

- *Fuse in fusebox from 23 onwards are numbered 223 onwards in Current Flow Diagram.*

Protected by copyright. Copying for private or commercial purposes, in part or in whole, is not permitted unless authorised by AUDI AG. AUDI AG does not guarantee or accept any liability with respect to the correctness of information in this document. Copyright by AUDI AG.

Coupling station with threaded connection

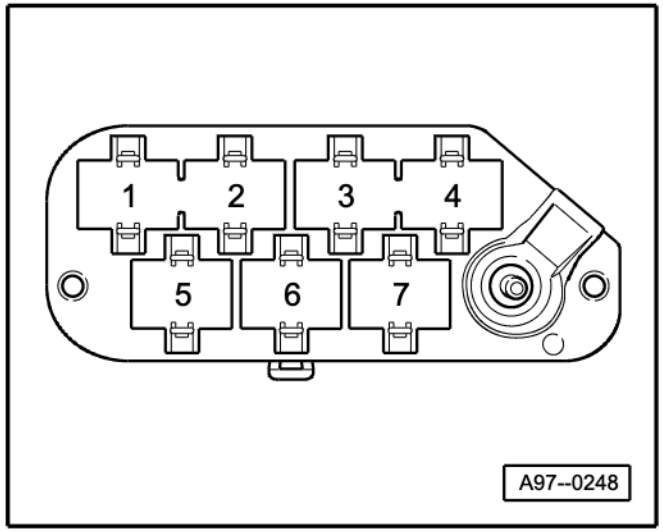

♦ in the electronics box, plenum chamber

2 - 10-Pin Connector, brown (T10a)
3 - 17-Pin Connector, red (T17d)

Connector station A-pillar

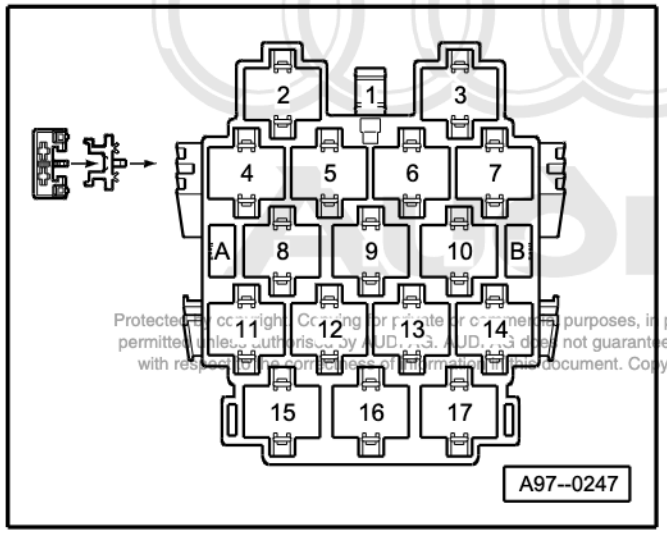

Protected by copyright. Copying for private or commercial purposes, in part or in whole, is not permitted unless authorised by AUDI AG. AUDI AG does not guarantee or accept any liability with respect to the correctness of information in this document. Copyright by AUDI AG.

♦ behind side trim, left

10 - 17-Pin Connector, orange (T17f)

4-Pin Relay Carrier with threaded connection

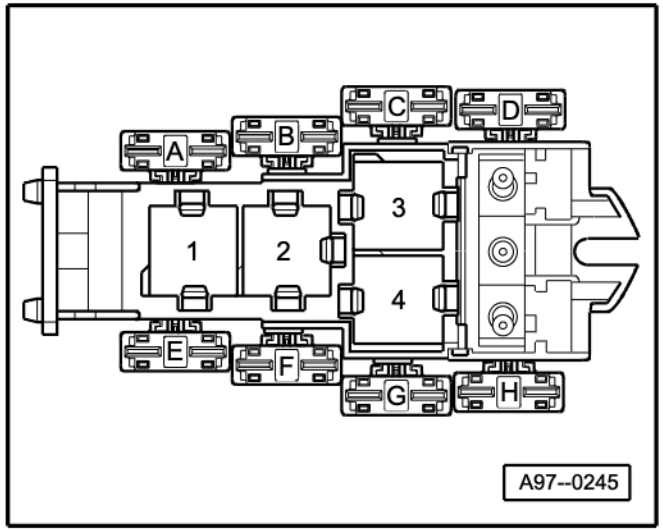

- Instrument panel driver side

Protected by copyright. Copying for private or commercial purposes, in part or in whole, is not permitted unless authorised by AUDI AG. AUDI AG does not guarantee or accept any liability with respect to the correctness of information in this document. Copyright by AUDI AG.

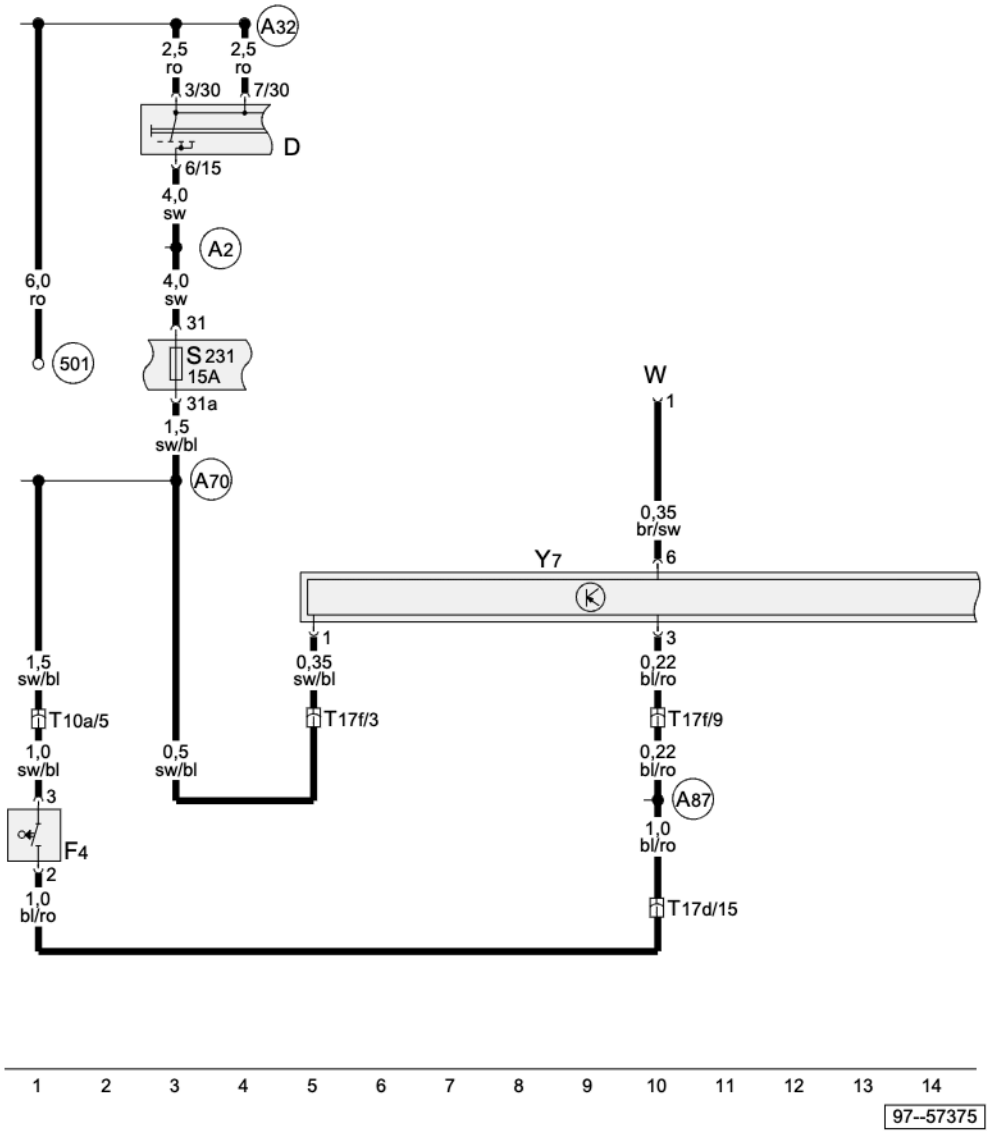

Automatic Day/Night Interior Mirror

D	Ignition/Starter Switch
F4	Back-Up Light Switch
S231	Fuse in fuse holder
T10a	10-Pin Connector, brown, connector station E-box, plenum chamber
T17d	17-Pin Connector, red, connector station E-box, plenum chamber
T17f	17-Pin Connector, orange, connector station A-pillar, left
W	Front Interior Light
Y7	Automatic Day/Night Interior Mirror
501	Threaded connection -2- (30) on the relay plate
A2	plus connection (15), in instrument panel wiring harness
A32	plus connection (30), in instrument panel wiring harness
A70	Connector (15a, fuse 231), in instrument panel wiring harness
A87	Connector (reverse lamp), in instrument panel wiring harness

Protected by copyright. Copying for private or commercial purposes, in part or in whole, is not permitted unless authorised by AUDI AG. AUDI AG does not guarantee or accept any liability with respect to the correctness of information in this document. Copyright by AUDI AG.

ws	=	white
sw	=	black
ro	=	red
br	=	brown
gn	=	green
bl	=	blue
gr	=	grey
li	=	lilac
ge	=	yellow
or	=	orange
rs	=	pink

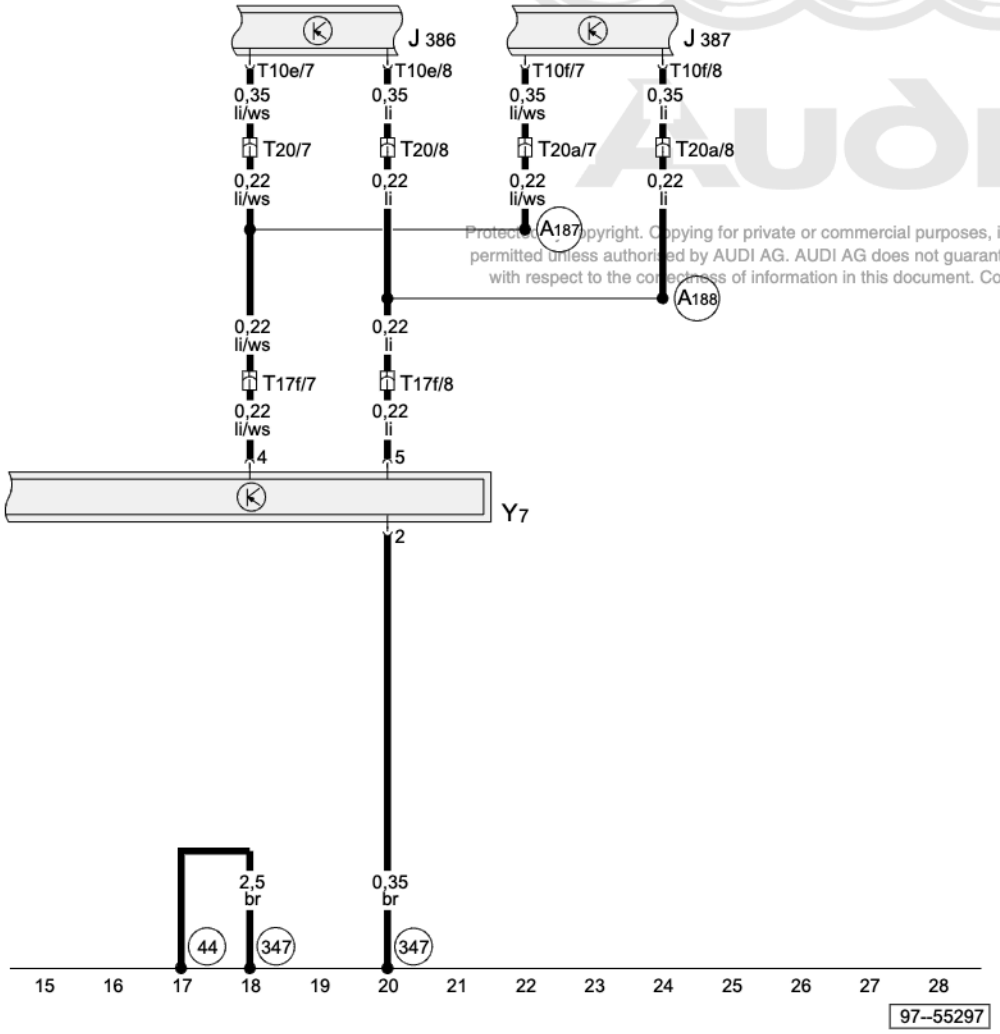

Protected by copyright. Copying for private or commercial purposes, in part or in whole, is not permitted unless authorised by AUDI AG. AUDI AG does not guarantee or accept any liability with respect to the correctness of information in this document. Copyright by AUDI AG.

Automatic Day/Night Interior Mirror

J386	Door control module, driver side
J387	Door control module, passenger side
T10e	10-Pin Connector, black, on door control module, driver's door
T10f	10-Pin Connector, black, on door control module, passenger door
T17f	17-Pin Connector, orange, connector station A-pillar, left
T20	20-Pin Connector, black, door A-pillar, left
T20a	20-Pin Connector, black, door A-pillar, right
Y7	Automatic Day/Night Interior Mirror
44	Ground connection, on left A-pillar, lower part
347	Ground Connection (in roof wiring harness)
A187	Automatic Day/Night Interior Mirror Connection 1 (in instrument panel wiring harness)
A188	Automatic Day/Night Interior Mirror Connection 1 (in instrument panel wiring harness)

ws	=	white
sw	=	black
ro	=	red
br	=	brown
gn	=	green
bl	=	blue
gr	=	grey
li	=	lilac
ge	=	yellow
or	=	orange
rs	=	pink